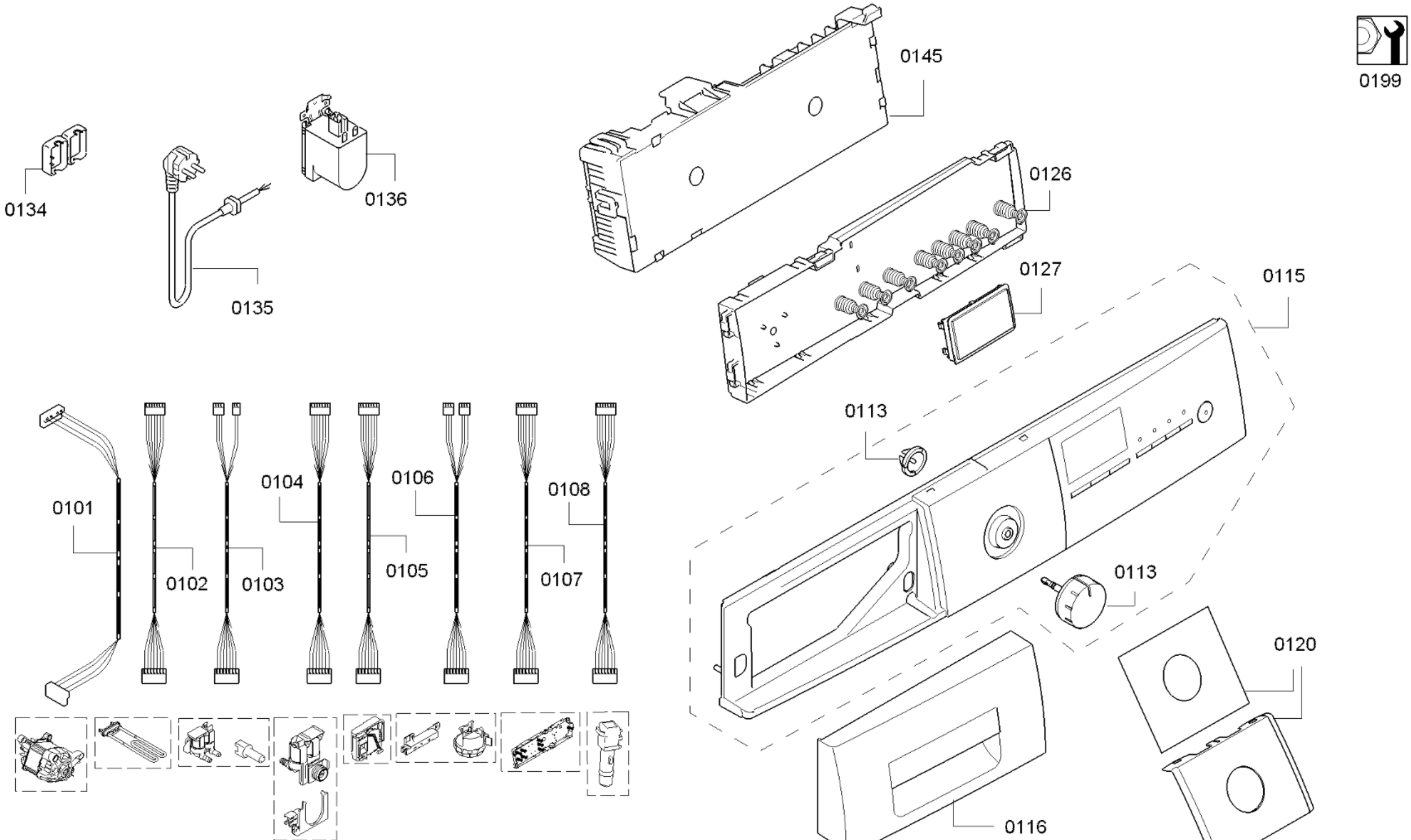

58300000141822 aet 000 c 1/4

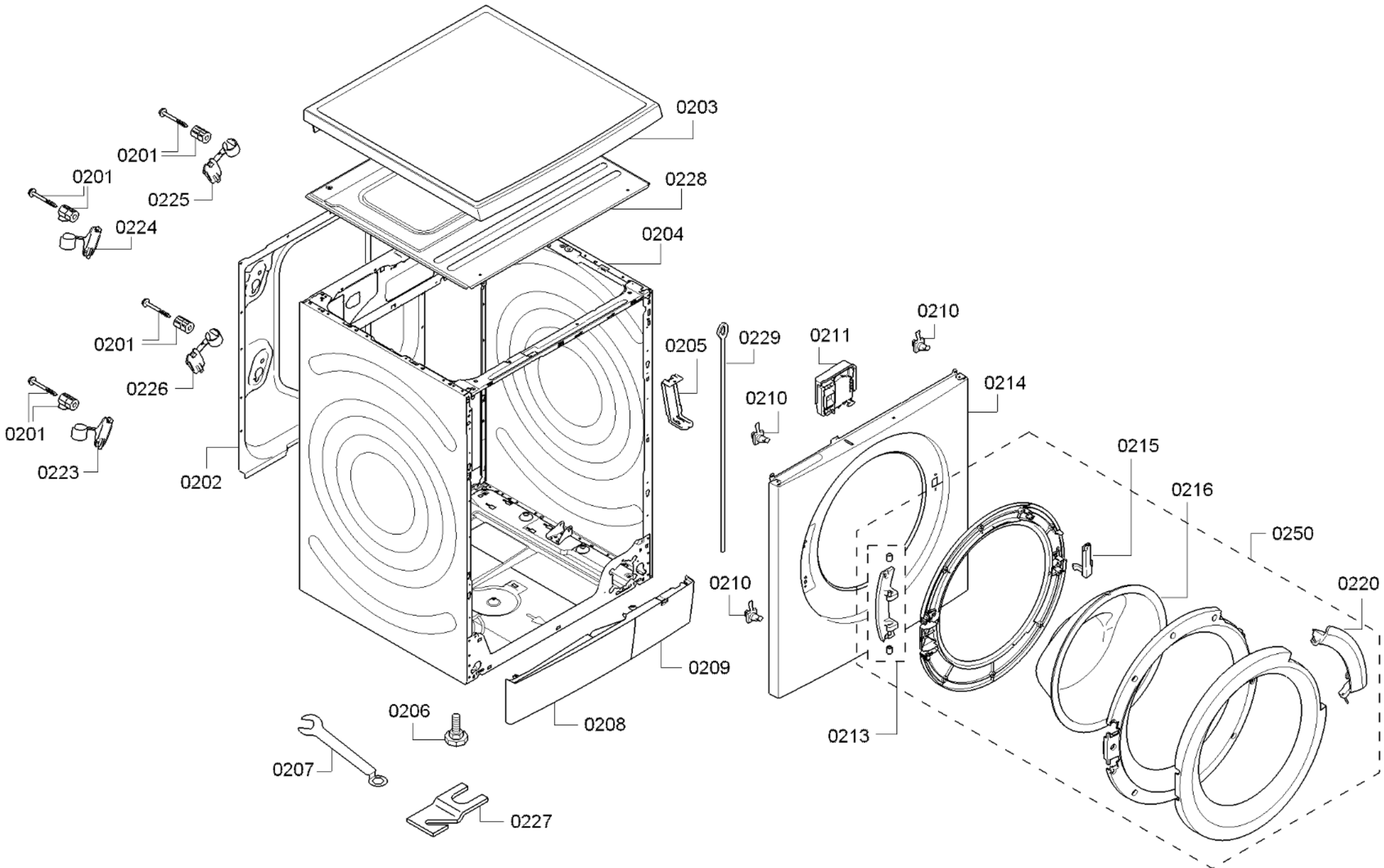

58300000141822 aet 000 c 2/4

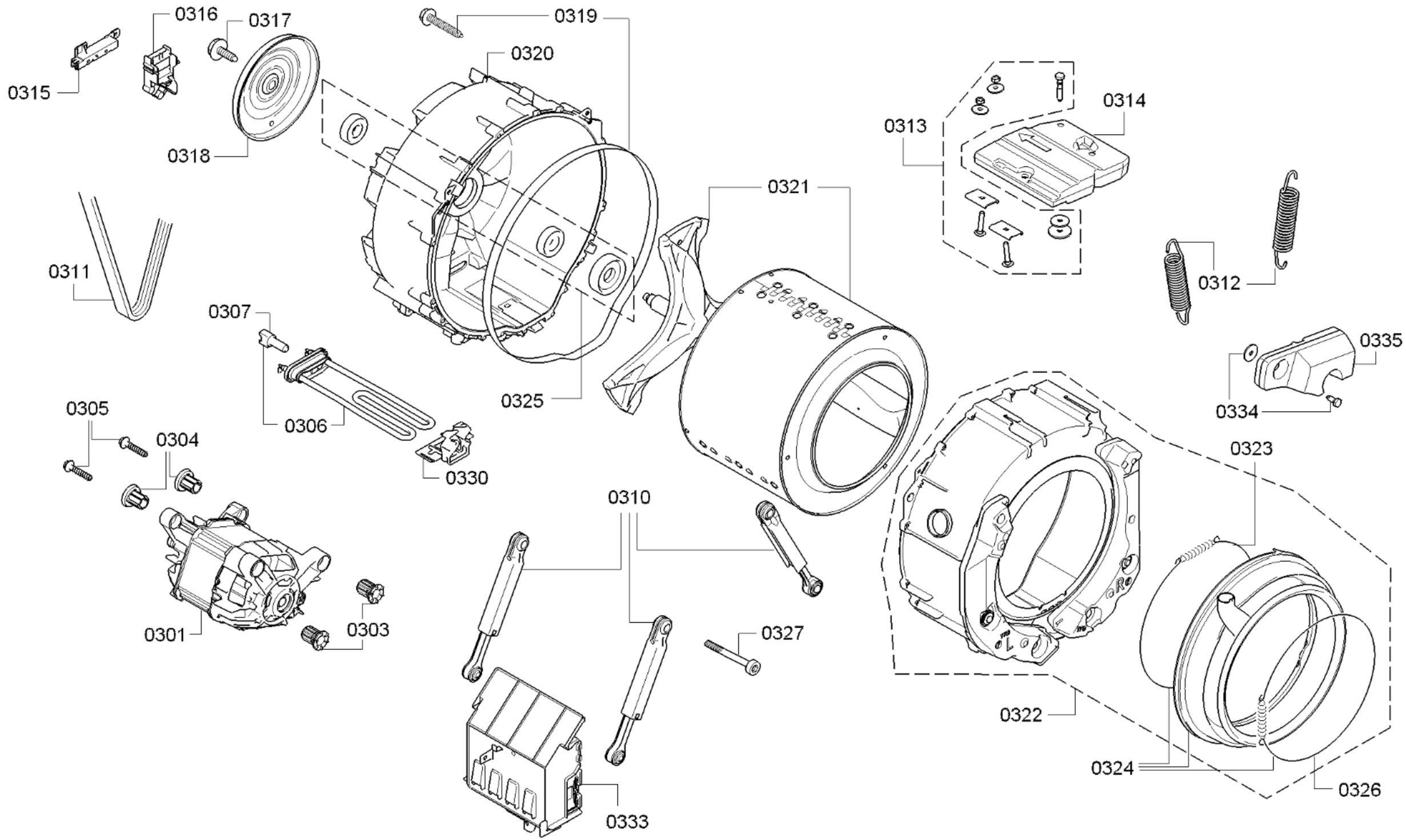

58300000141822 aet 000 c 3/4

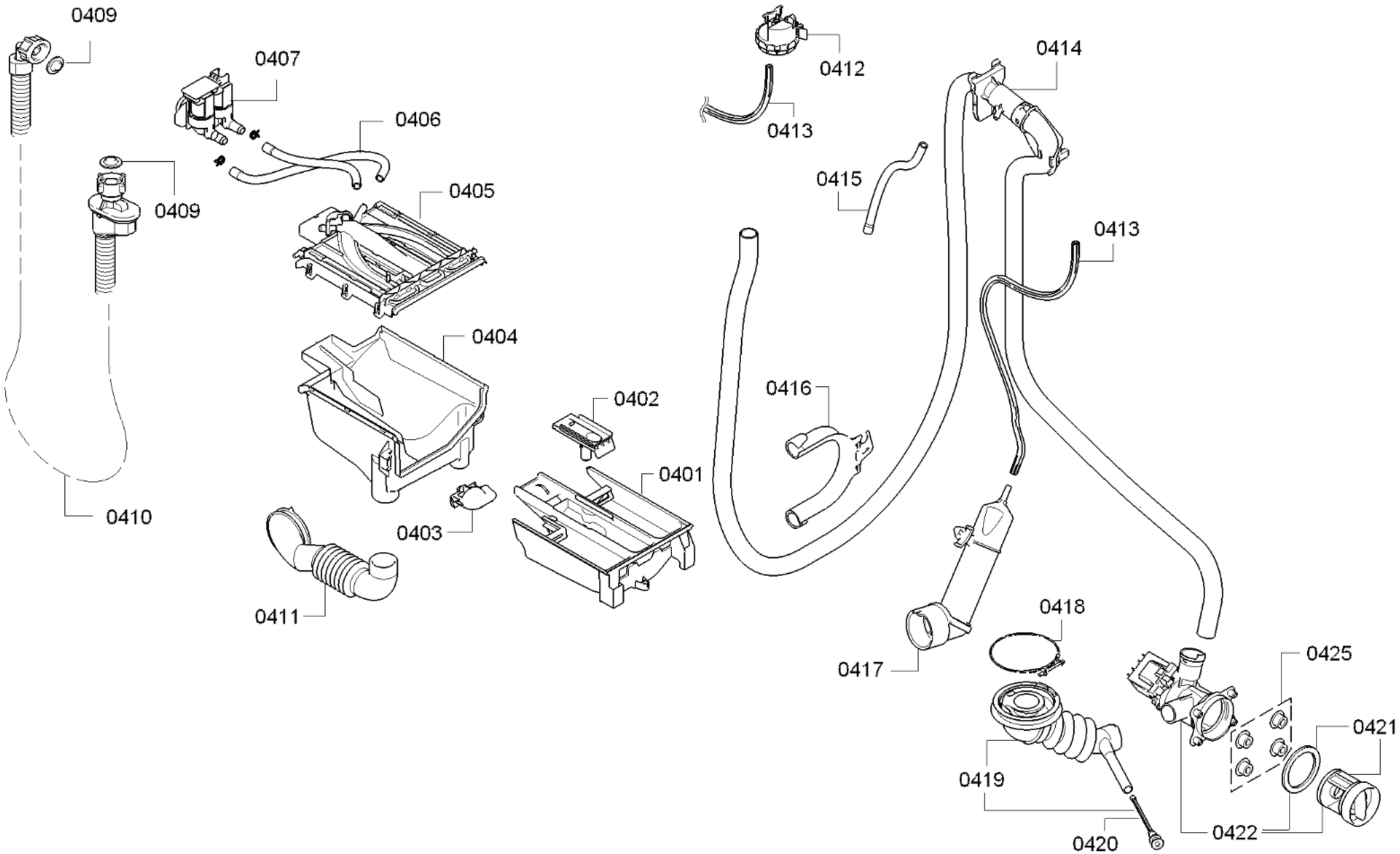

58300000141822 aet 000 c 4/4