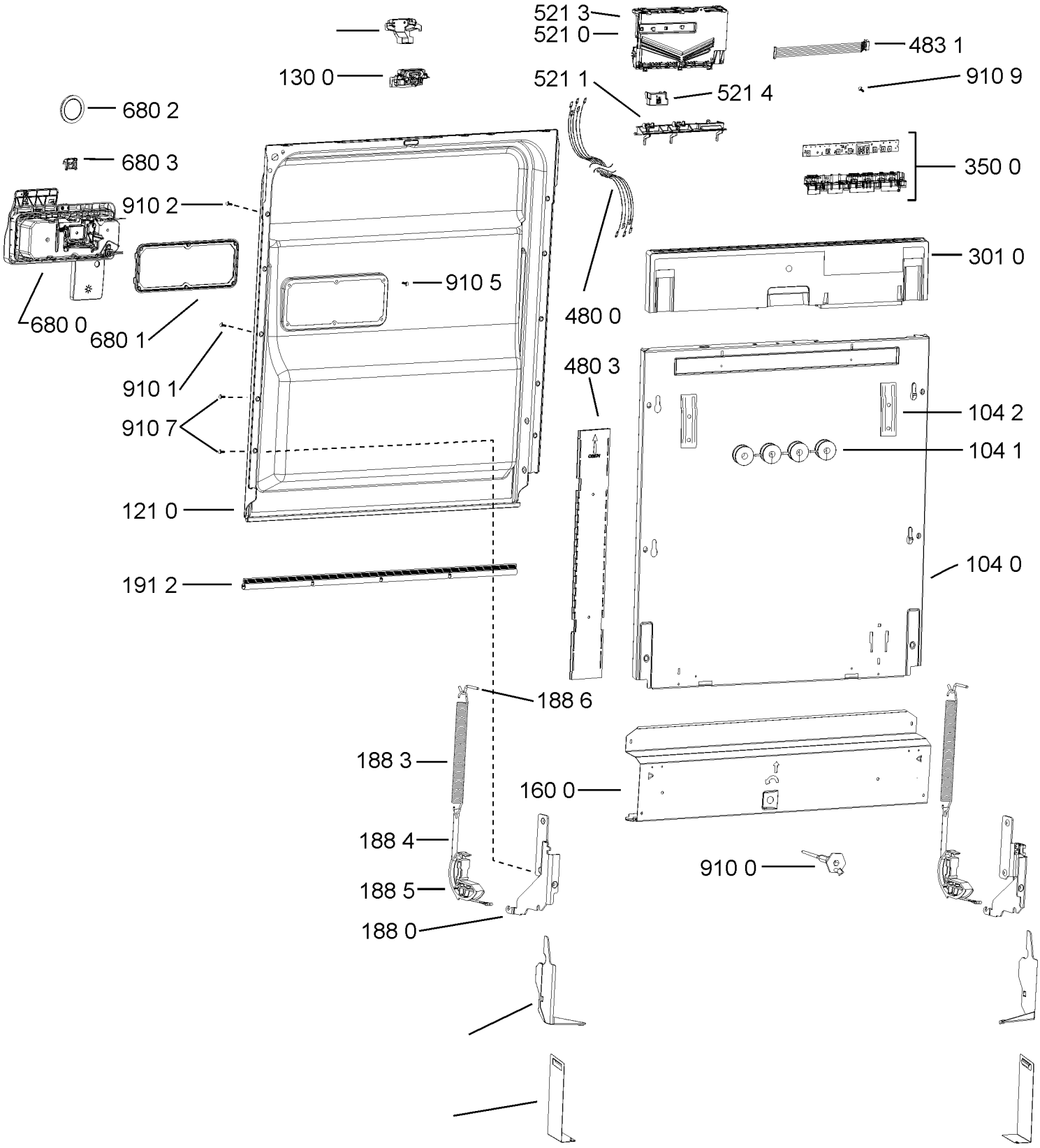

400010632798