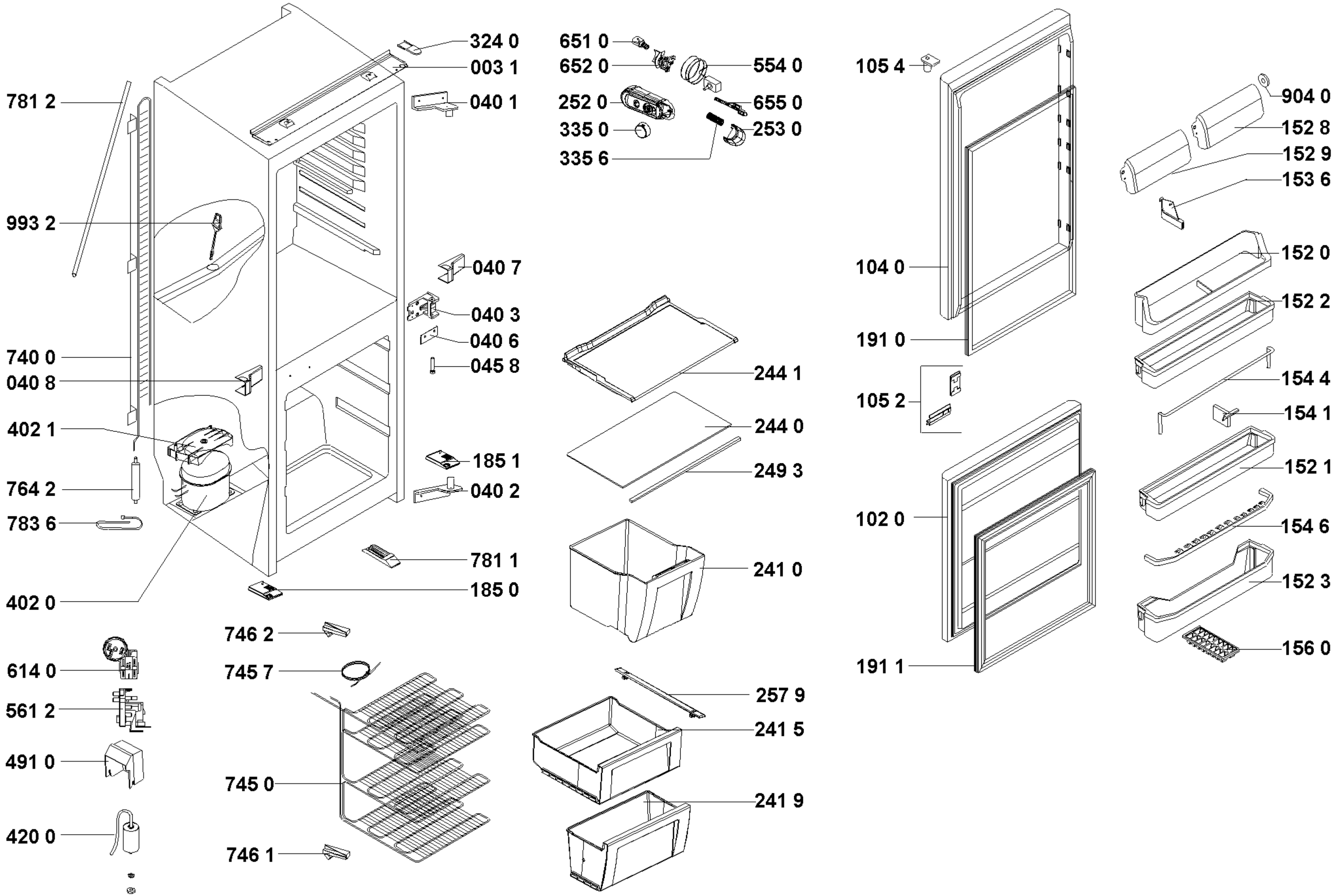

4000 105 05903