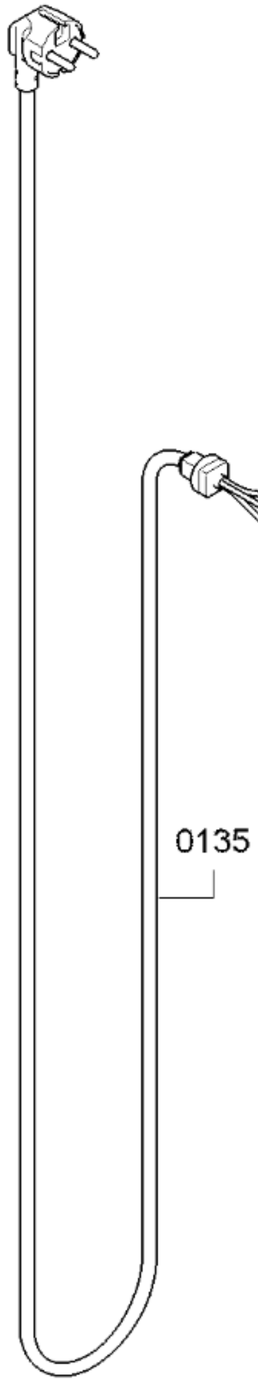

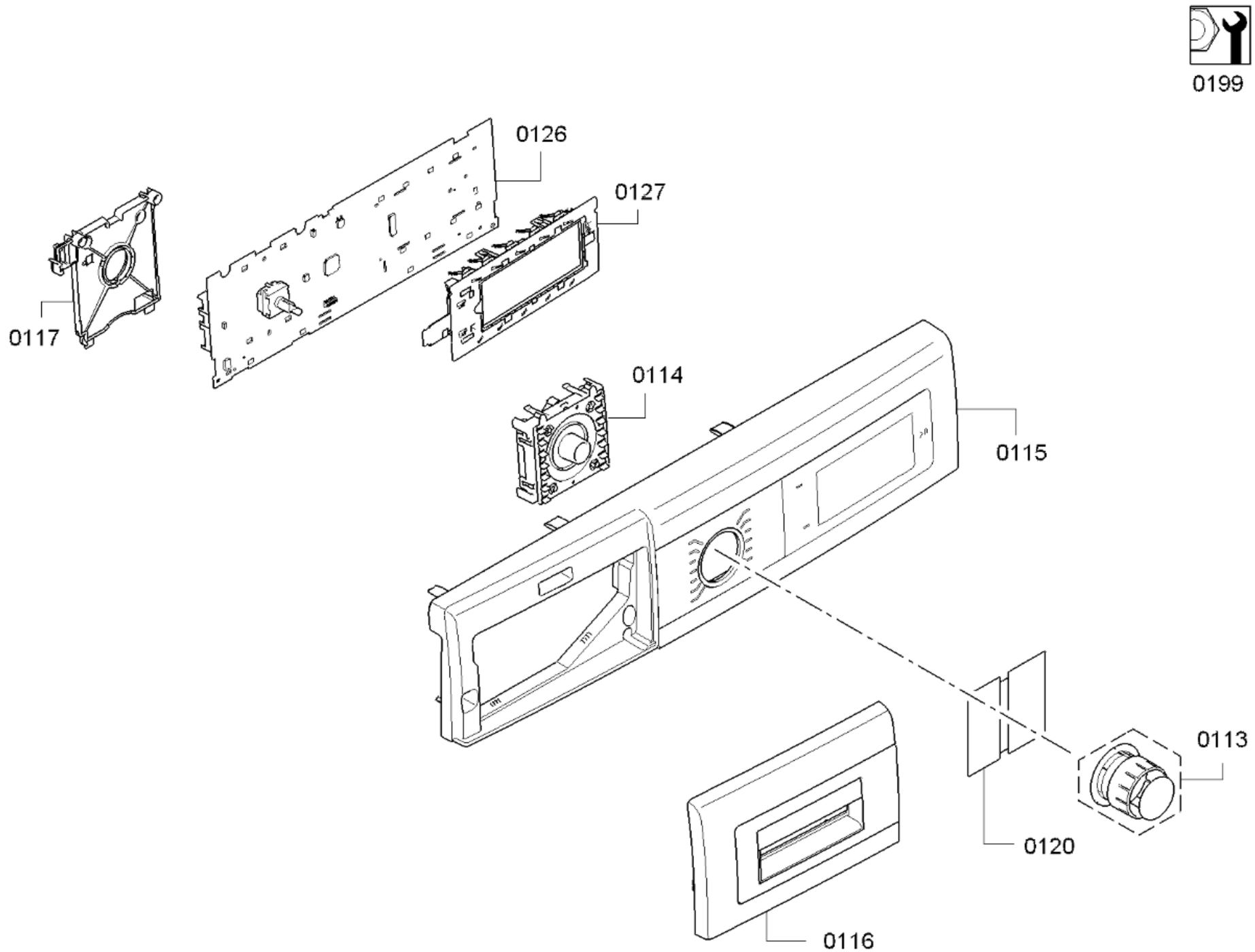

58300000182375 aet 001 b

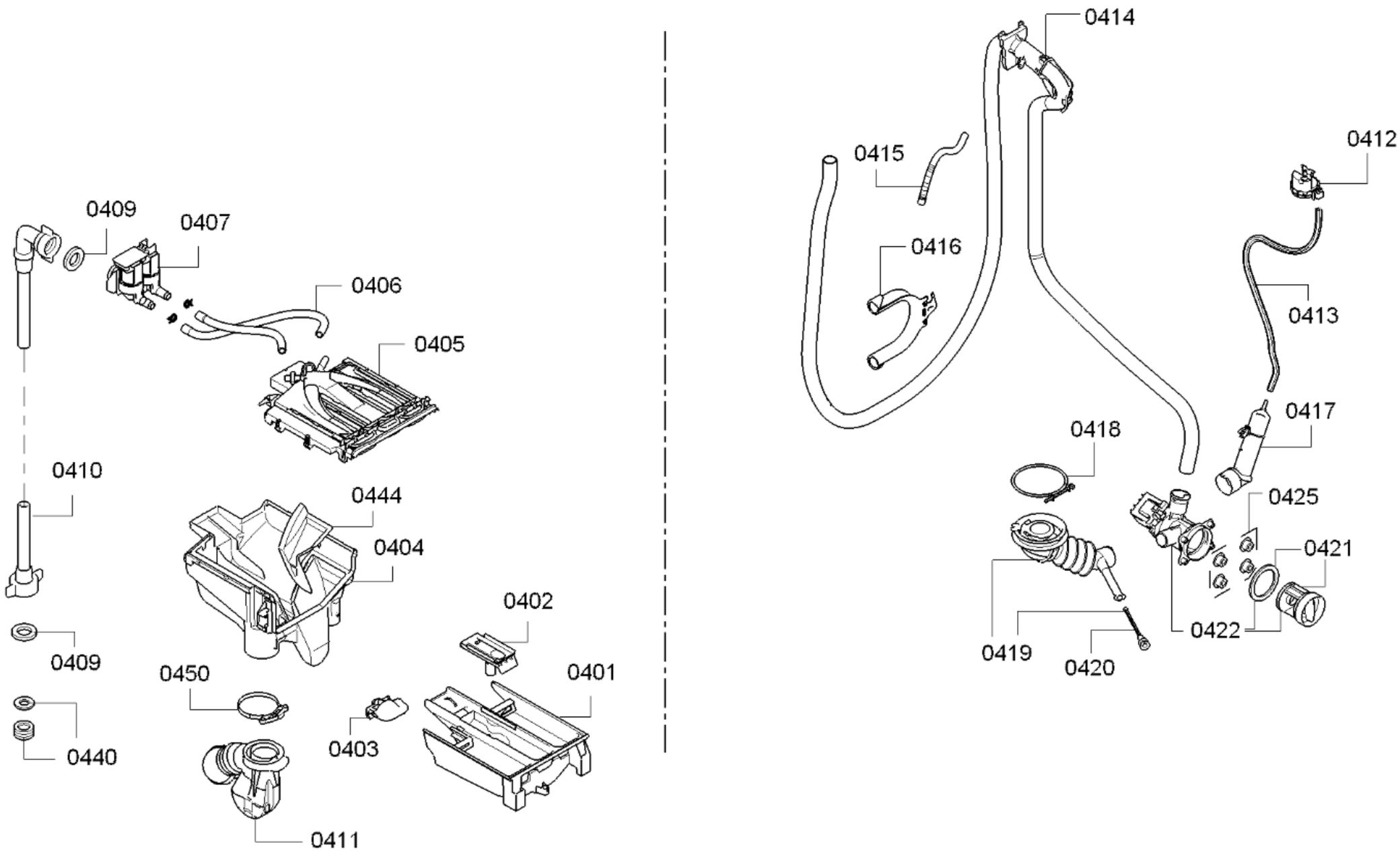

58300000182835 aet 004 b

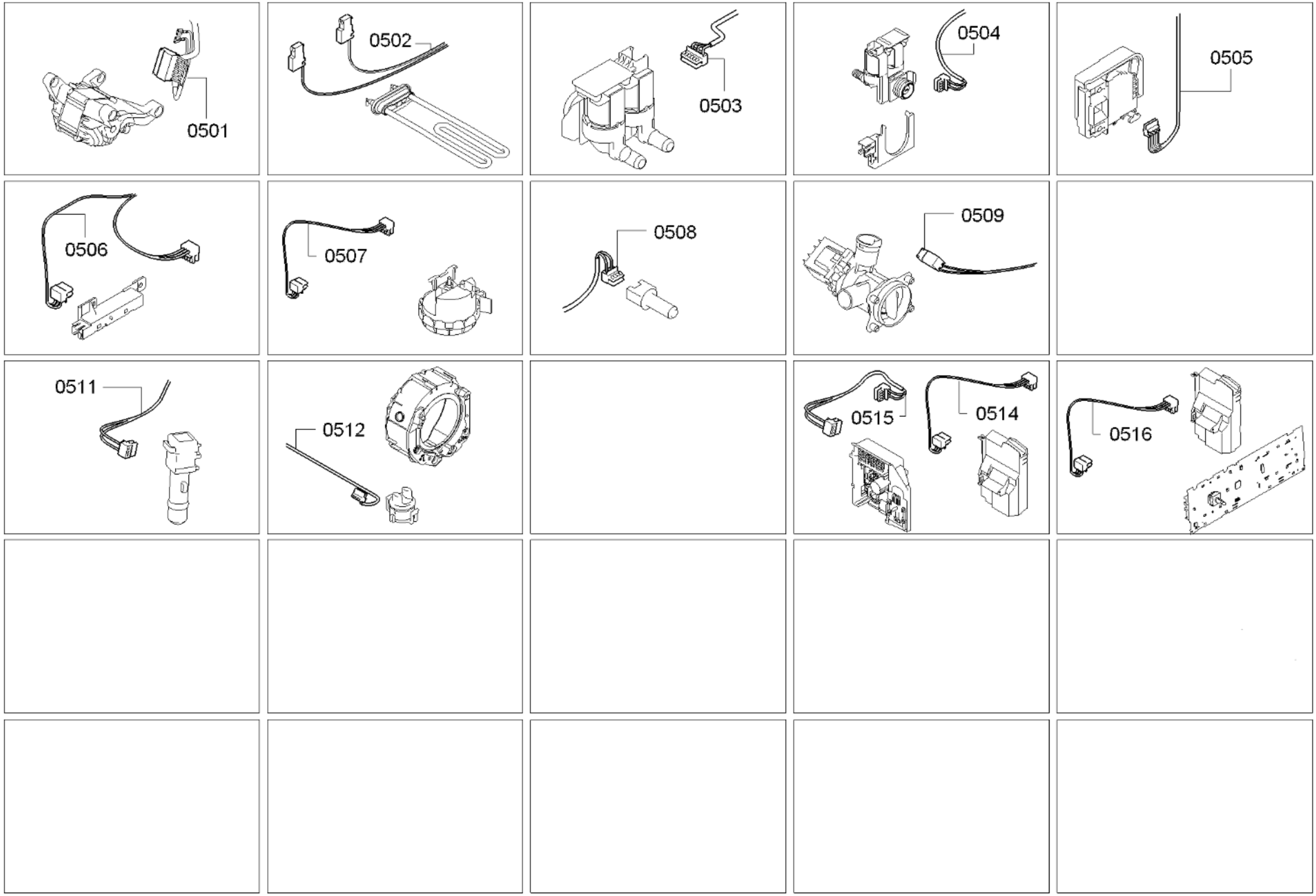

58300000183235 aet 005 b

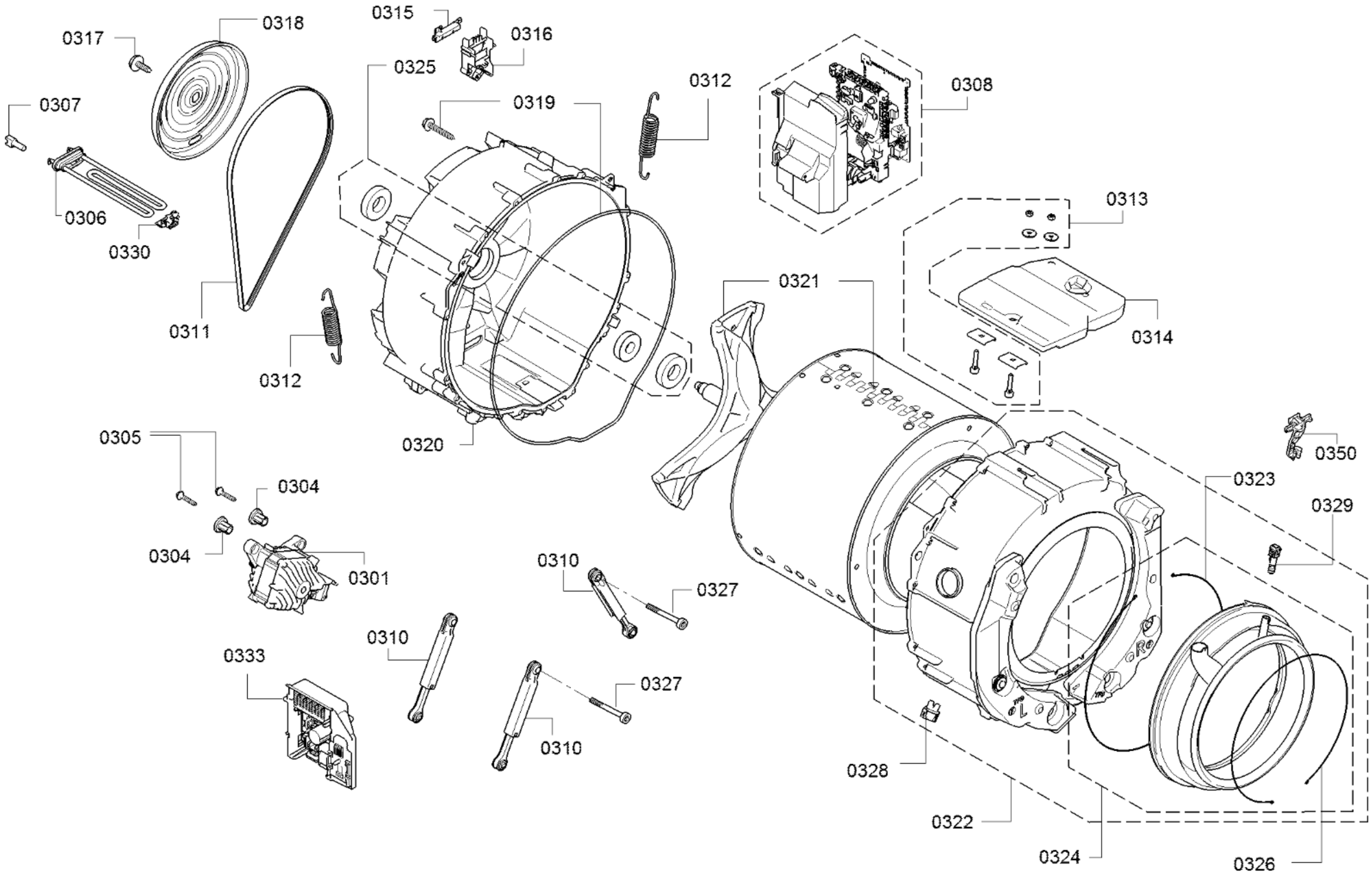

58300000182371 aet 003 d

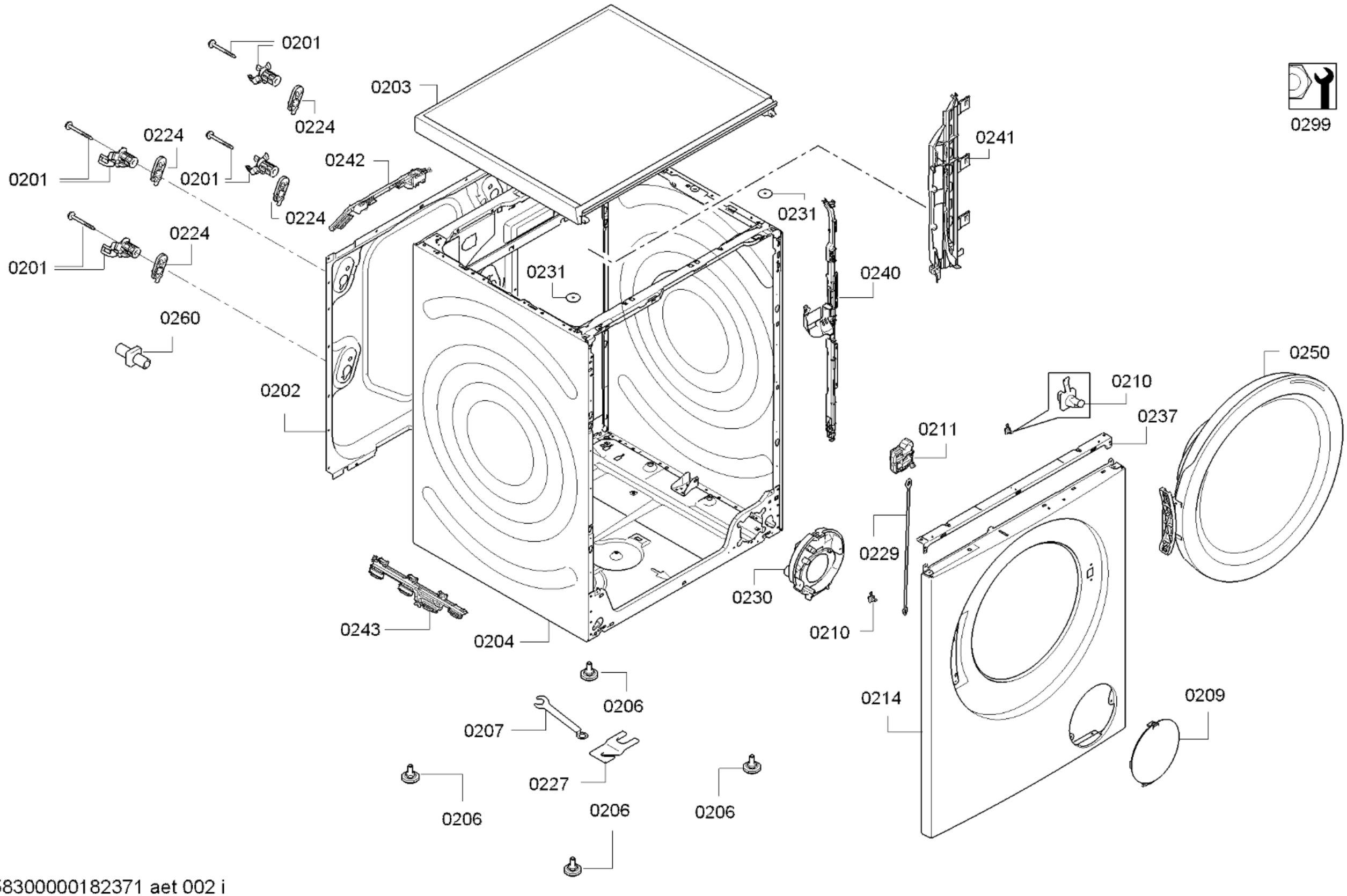

58300000182371 aet 002 i