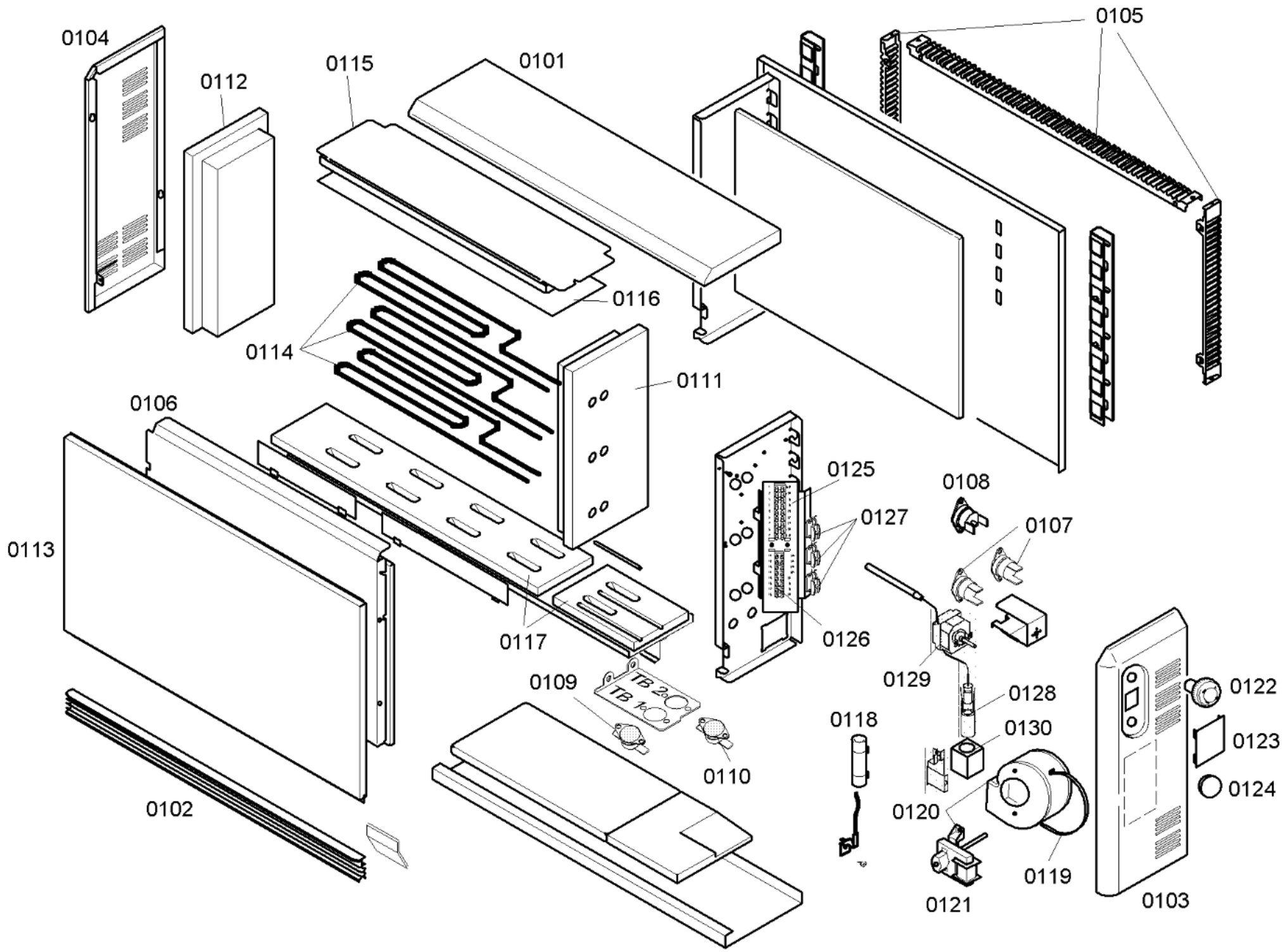

58300000071613 aet 000 b 1/1